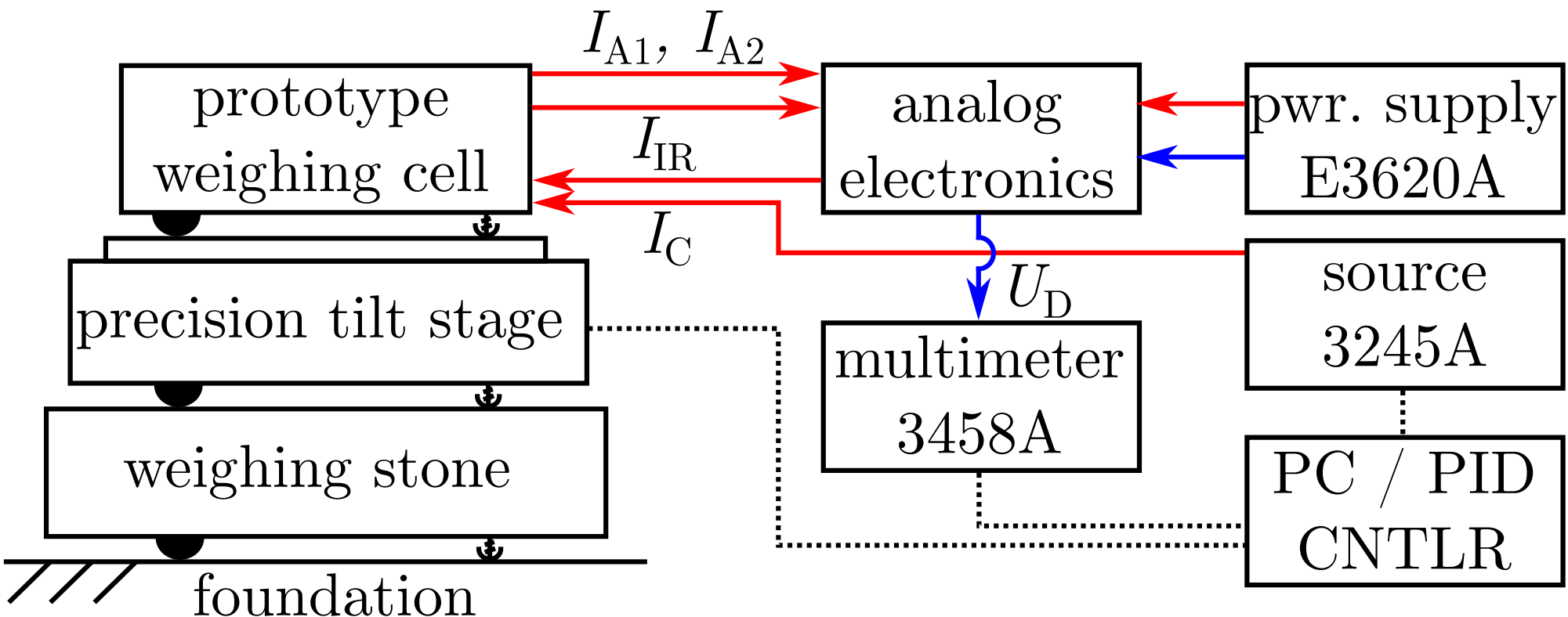
I_{A1}, I_{A2}
prototype weighing cell
analog electronics
pwr. supply E3620A
I_{IR}
I_C
U_D
precision tilt stage
source 3245A
multimeter 3458A
weighing stone
PC / PID CNTLR
foundation