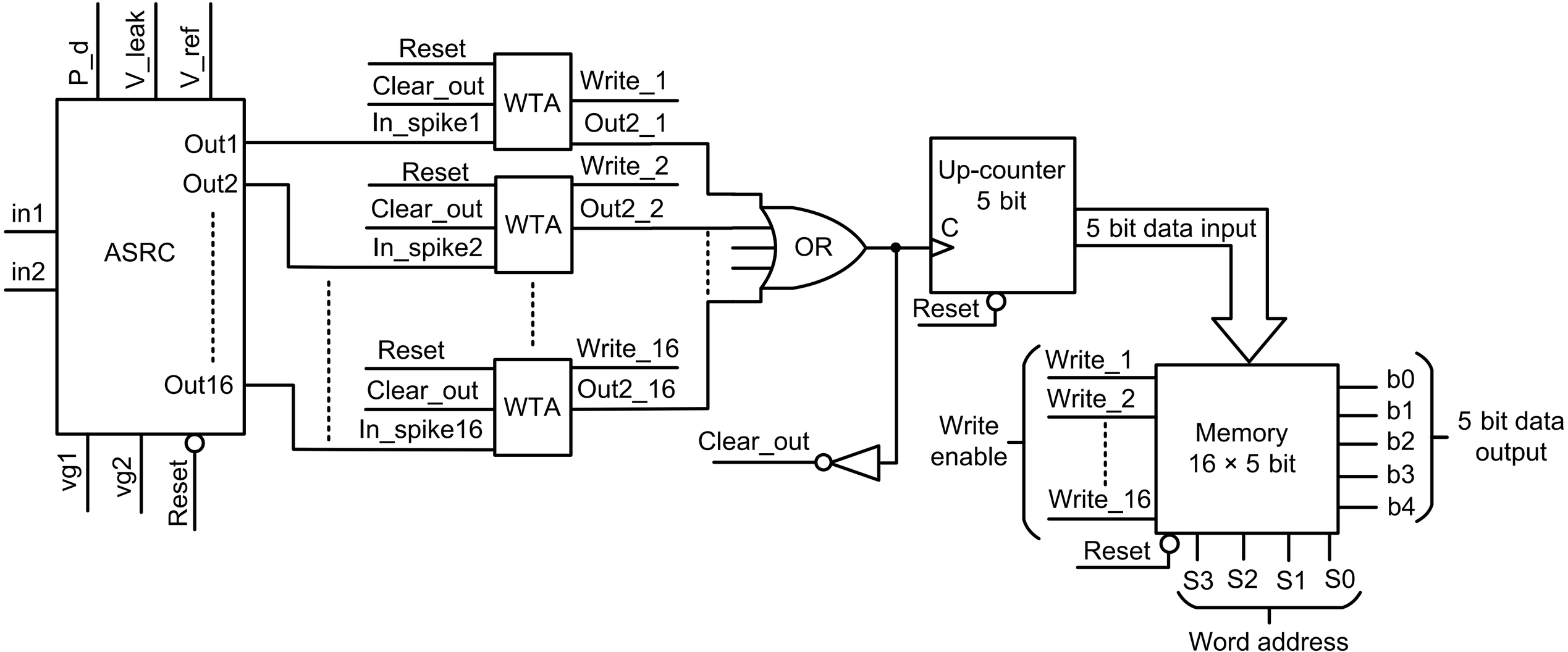
P_d
V_leak
V_ref
in1
in2
ASRC
Out1
Out2
Out16
vg1
vg2
Reset
Reset
Clear_out
In_spike1
WTA
Write_1
Out2_1
Reset
Clear_out
In_spike2
WTA
Write_2
Out2_2
Reset
Clear_out
In_spike16
WTA
Write_16
Out2_16
OR
Clear_out
Up-counter
5 bit
C
Reset
5 bit data input
Write_1
Write_2
Write_16
Write
enable
Memory
16 × 5 bit
Reset
b0
b1
b2
b3
b4
5 bit data
output
S3 S2 S1 S0
Word address