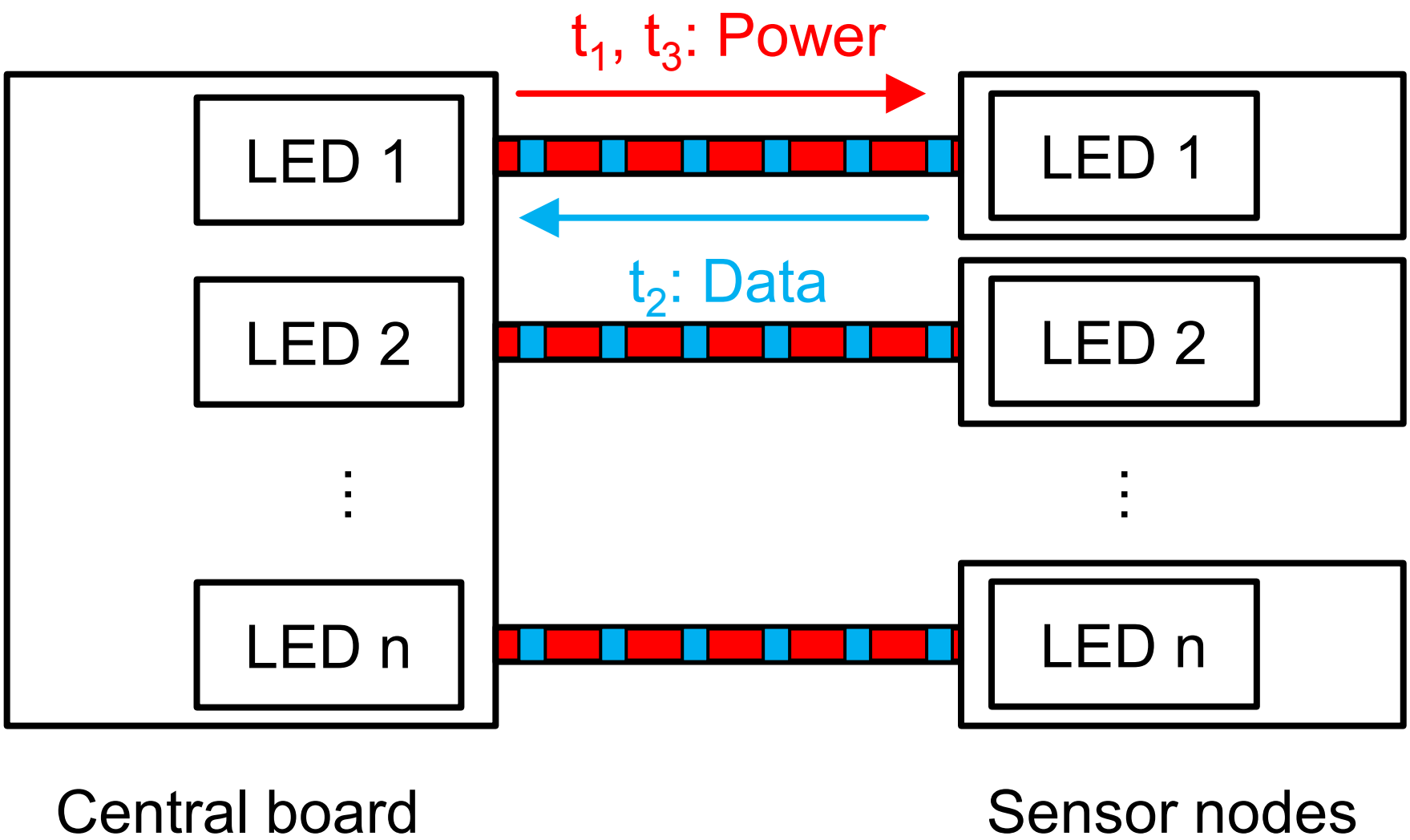
t1, t3: Power
LED 1
LED 1
t2: Data
LED 2
LED 2
LED n
LED n
Central board
Sensor nodes