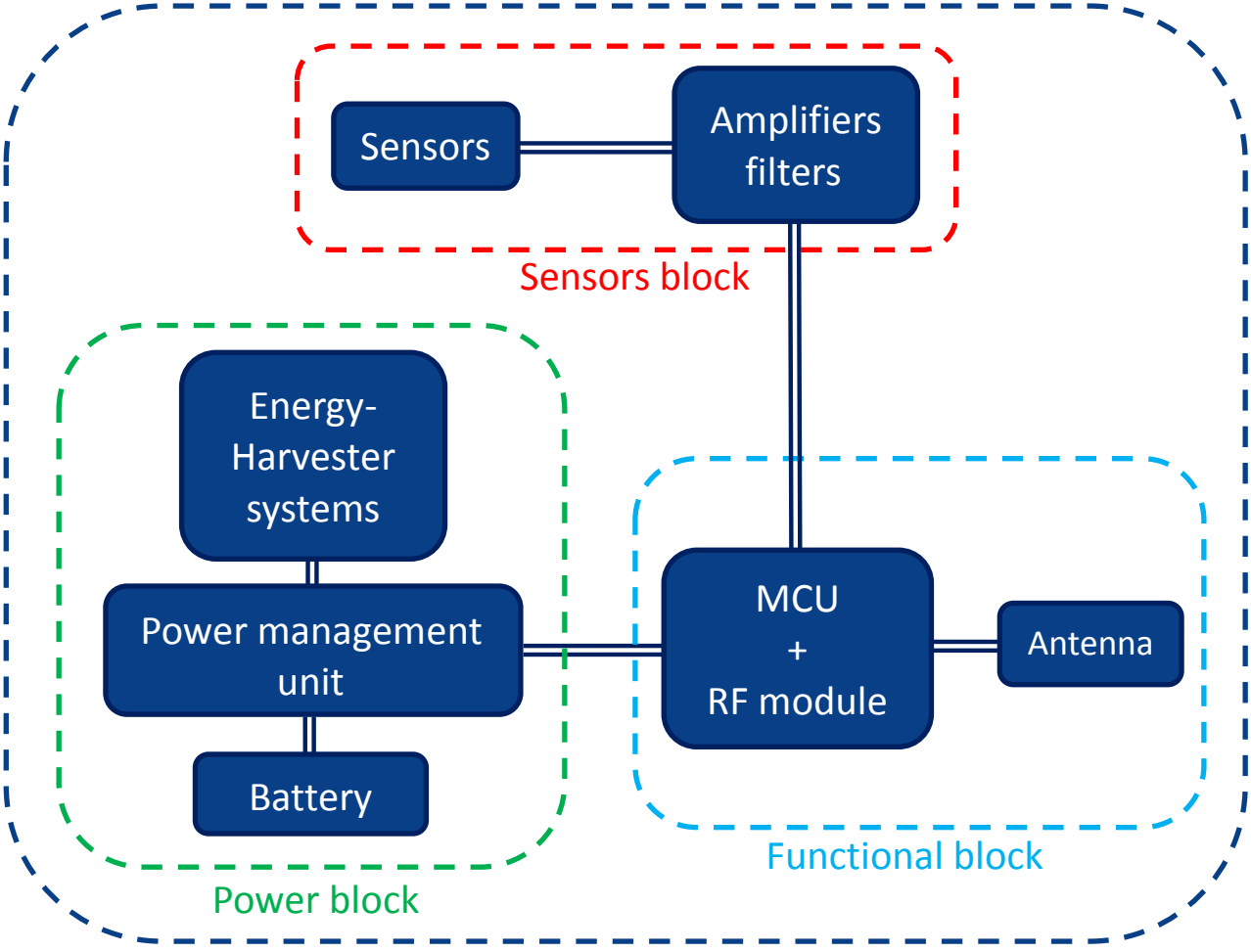
Sensors
Amplifiers filters
Sensors block
Energy-Harvester systems
Power management unit
Battery
Power block
MCU + RF module
Antenna
Functional block